Series 62

FORGED STEEL GLOBE VALVE



www.tfv.mx

SERIES 62



Features / Design

1.- Forged Steel, OS&Y Design.

2.- Sizes 1/2" to 2", Class 800# to 2500#.

3.- Basic design API 602 & ANSI / ASME B16.34.

4.- Threaded ends according to ANSI / ASME B1.20.1.

5.- Socket Weld ends according to ANSI/ASME B16.11.

6.- Butt Weld ends according to ANSI / ASME B16.25.

7.- Flanged ands ANSI / ASME B16.5 (welded).

8.- Face to face dimensions acc. to MFG.

9..- Inspection & Testing API 598.

For ASME 800# / 1500#

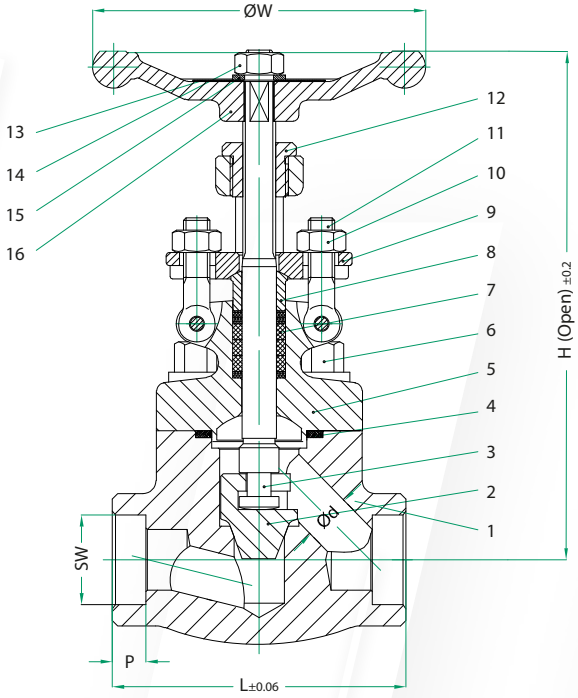

Material List

NO.	DESCRIPTION	MATERIAL	
		TRIM 5	TRIM 10
1	BODY	A105N + STL #6	A182 F316
2	DISC	A182 F6a + ST #6	A182 F316
3	STEM	A276 410	A276 316
4	GASKET	SS304 + GRAPHITE	SS316 + GRAPHITE
5	BONNET	A105N	A182 F316
6	HEX. BOLT	A193 B7M	A193 B8M
7	PACKING	FLEX. GRAPHITE	FLEX. GRAPHITE
8	GLAND	A276 410	A276 410
9	GLAND FLANGED	A105N	A182 F316
10	GLAND NUT	A194 2HM	A194 8M
11	GLAND EYEBOLT	A193 B7M	A193 B8M
12	YOKE NUT	ASTM 1035	ASTM 1035
13	NAME PLATE	STAINLESS STEEL	STAINLESS STEEL
14	NUT	CARBON STEEL	CARBON STEEL
15	WASHER	CARBON STEEL + Zn	CARBON STEEL + Zn
16	HANDWHEEL	A197	A197

NOTE: Material list as example, TRIM 5 and 10 acc. to NACE MR0175, other materials and trims available; please contact us.

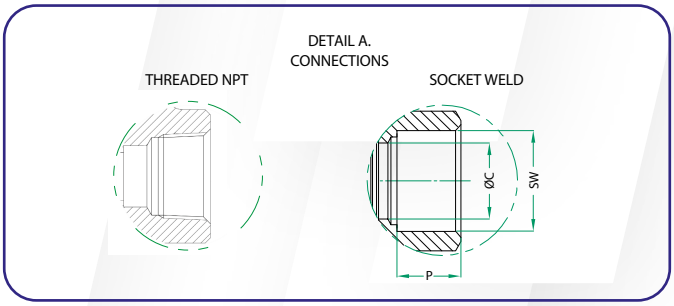

Dimensions (inches)

ANSI / ASME CLASS 800#

SIZE	L (in)	Ød (in)	NPT (in)	H (in)	ØW (in)	CV (USgpm	Torque (Nm)	Weight (Kg)
1/2″	3,11	0,39	1/2"	6,77	3,74	2,00	407,13	4,85
3/4″	3,62	0,51	3/4"	6,77	3,74	4,00	460,24	5,29
1″	4,37	0,67	1"	8,19	4,53	6,00	584,15	9,04
1 1/2″	5,98	1,06	1-1/2"	8,19	5,71	15,00	902,78	19,84
2″	6,77	1,30	2"	11,42	6,50	23,00	1274,51	30,86

ANSI / ASME CLASS 1500#

SIZE	L (in)	Ød (in)	NPT (in)	H (in)	ØW (in)	CV (USgpm	Torque (Nm)	Weight (Kg)
1/2″	3,62	0,39	1/2"	6,77	4,53	2,00	477,94	5,29
3/4″	4,37	0,51	3/4"	8,19	4,53	4,00	584,15	9,04
1″	4,72	0,67	1"	8,94	5,71	6,00	796,57	12,13
1 1/2″	6,77	1,06	1-1/2"	11,42	7,87	15,00	1593,14	30,86
2″	8,66	1,30	2"	13,19	7,87	23,00	2124,18	39,68

NOTE:
For ASME Class 2500 valve dimensions, please contact us
.

Dimensions (Millimeters)

ASME CLASS 800#

SIZE	L (mm)	Ød (mm)	NPT (mm)	H (mm)	ØW (mm)	CV (USgpm)	Torque (Nm)	Weigth (Kg)
1/2″	79,00	10,00	1/2"	172,00	95,00	2,00	46,00	2,20
3/4″	92,00	13,00	3/4"	172,00	95,00	4,00	52,00	2,40
1″	111,00	17,00	1"	208,00	115,00	6,00	66,00	4,10
1 1/2″	152,00	27,00	1-1/2"	208,00	145,00	15,00	102,00	9,00
2″	172,00	33,00	2"	290,00	165,00	23,00	144,00	14,00

ASME CLASS 1500#

SIZE	L (mm)	Ød (mm)	NPT (mm)	H (mm)	ØW (mm)	CV (USgpm)	Torque (Nm)	Weigth (Kg)
1/2″	92,00	10,00	1/2"	172,00	115,00	2,00	54,00	2,40
3/4″	111,00	13,00	3/4"	208,00	115,00	4,00	66,00	4,10
1″	120,00	17,00	1"	227,00	145,00	6,00	90,00	5,50
1 1/2″	172,00	27,00	1-1/2"	290,00	200,00	15,00	180,00	14
2″	220,00	33,00	2"	335,00	200,00	23,00	240,00	18

NOTE:
For ASME Class 2500 valve dimensions, please contact us
.

How to Order

BODY DESIGN (SERIES)

62	Globe Valve OS&Y API 602
62Y	Y Pattern Globe Valve OS&Y API 602
62A	Angle Pattern Globe Valve OS&Y API 602

BONNET DESIGN

B	Bolted Bonnet
W	Welded Bonnet
P	Pressure Seal

DISC DESIGN

C	Conical Std Plug
N	Needle Plug

SPECIAL FEATURES

NN	None
ND	NACE MR0103 / MR0175 & Low Fugitive Emmisions
NT	NACE MR0103
NF	NACE MR0175
NM	NACE MR103 & MR0175
FA	Fire Safe API 6FA
FM	Fire Safe API 6FA & NACE MR0103
FN	Fire Safe API 6FA & NACE MR0175
CP	Complete (Full) Port
CM	Complete (Full) Port & NACE MR0103
CN	Complete (Full) Port & NACE MR0175
LF	Fugitive Emmisions
BS	Bellow Seal
CY	Cryogenic Service
VS	Vacuum Service
OX	Oxygen Service
BM	Bellow Seal With Live Loads & Nace MR 0103
BN	Bellow Seal With Live Loads & Nace MR 0175
BG	Bellow Seal, Nace MR 0175 & Fire Safe API 6FA
BA	Bellow Seal With Live Loads, Nace MR 0103 & Fire Safe API 6FA/6FD
BS	Bellow Seal

MATERIAL

BODY

01	Bronze Aluminum ASTM B148 UNS C95200
02	Bronze Aluminum ASTM B148 UNS C95300
03	Bronze Aluminum ASTM B148 UNS C95600
04	Bronze Aluminum ASTM B148 UNS C95500
05	Bronze Aluminum ASTM B148 UNS C95800
06	ASTM B62 C83600
07	ASTM B124 C61900
08	ASTM B124 C63200
19	ASTM A105/ ASTM A350 LF2
20	ASTM A105
21	ASTM A105N
22	ASTM A350 LF2[6]
23	ASTM A350 LF[6]
24	ASTM A182-F1
25	ASTM A182-F11 CL2[7]
26	ASTM A182-F22 CL3[7]
27	ASTM A182 Gr F5[7]
28	ASTM A182 Gr F9[6]
29	ASTM A182 Gr F91
30	ASTM A182 F316[8]
31	ASTM A182 F316L[8]
32	ASTM A182 F304[8]
33	ASTM A182 F304L[8]
34	ASTM A182 F316/ F316L[10]
35	ASTM A182 F304/ F304[10]
36	ASTM A182 F317
37	ASTM A182 F317L
38	ASTM A182 F347H
39	ASTM A182 F316H
40	ASTM B564 N04400 (MONEL 400)

TRIM* (Stem, Disc, Seats)

01	OBSOLETE
02	SS304 / SS304 / SS304
03	SS310 / SS310 / SS310
04	SS410 / 13CR-H / 13CR-H
05	SS410 / HF / HF
5A	SS410 / NiCr Alloy/ NiCr Alloy
06	SS410 / 13Cr / Monel
07	SS410 / 13CR / 13CR-H
08	SS410 / 13CR / HF
8A	SS410 / 13CR / NiCr Alloy
09	Monel / Monel / Monel
10	SS316 / SS316 / SS316
11	Monel / Monel / HF o Monel / Monel / NiCr Alloy
12	SS316 / SS316 / HF o SS316 / SS316 / NiCr Alloy
13	Alloy 20 / Alloy 20 / Alloy 20
14	ALLOY 20 / ALLOY 20 / HF o ALLOY 20 / ALLOY 20 / NiCr Alloy
15	SS304 / HF / HF
16	SS316 / HF / HF
17	SS347 / HF / H
18	ALLOY 20 / HF / HF

ENDS

FRF	Flanged RF ASME B16.5/ B16.47
WRF	Flanged RF ASME B16.5 (Welded Flange)
WTJ	Flanged RTJ ASME B16.5 (Welded Flange)
RTJ	Flanged RTJ ASME B16.5 (Integral Flange)
THD	Threaded NPT ASME B1.20.1
SWD	Socket Welded ASME B16.11
BST	Buttweld SCH STD ASME B16.25/ ASME B36.10
BXS	Buttweld Extra Strong wall thickness ASME B16.25/ ASME B36.10
BXX	Buttweld doble Extra Strong wall thickness ASME B16.25/ ASME B36.10[11]
B10	Buttweld SCH 10 ASME B16.25/ ASME B36.10
B20	Buttweld SCH 20 ASME B16.25/ ASME B36.10
B30	Buttweld SCH 30 ASME B16.25/ ASME B36.10
B40	Buttweld SCH 40 ASME B16.25/ ASME B36.10
B60	Buttweld SCH 60 ASME B16.25/ ASME B36.10
B80	Buttweld SCH 80 ASME B16.25/ ASME B36.10
B00	Buttweld SCH 100 ASME B16.25/ ASME B36.10
B12	Buttweld SCH 120 ASME B16.25/ ASME B36.10

CLASS

0	ANSI 150#
3	ANSI 300#
6	ANSI 600#
8	API 800#
9	ANSI 900#
1	ANSI 1500#
2	ANSI 2500#
4	ANSI 4500#

SIZE

0.5	1/2"
0.75	3/4"
01	1"
01.25	1 1/4"
01.5	1 1/2"
02	2"

OPERATION

HO	Solid Handwheel Operator
BS	Bare Shaft
EA	Electric Actuator
PA	Pneumatic Actuator
HX	Extended Stem & Solid Handwheel
BX	Extended Stem & Bare Shaft
EX	Extended Stem & Electric Actuator
PX	Extended Stem & Pneumatic Actuator
HC	Handwheel which has a Locking Device
HL	Extended Stem & Handwheel which has a Locking Device
HB	Extended Bonnet & Solid Handwheel
GB	Extended Bonnet & GearBox Operator with Solid Handwheel
BB	Extended Bonnet & Bare Shaft

SERIES 62

BODY DESIGN (SERIES)	BONNET DESIGN	DISC DESIGN	SPECIAL FEATURES
62 Globe Valve OS&Y API 602	B Bolted Bonnet	C Conical Std Plug	HS Wet H2S Resistant Steels (Category1) NACE MR0103
62Y Y Pattern Globe Valve OS&Y API 602	W Welded Bonnet	N Needle Plug	LL Live Loads in Packing Gland
62A Angle Pattern Globe Valve OS&Y API 602	P Pressure Seal		BL Bellow Seal With Live Loads
			HI HIC RESISTANT STEELS (CATEGORY 2)

MATERIAL BODY	MATERIAL TRIM* (Stem, Disc, Seats)
41 ASTM A182 F20 (ALLOY 20)	19 Nickel alloy / Nickel alloy / Nickel alloy
42 ASTM B564 N10276 (Hastelloy C276) ASTM A351	20 Nickel alloy / Nickel alloy / Nickel alloy+HF
43 CD3MN (Duplex 2205)	21 Nickel alloy / Nickel alloy + HF / Nickel alloy +HF
44 ASTM A182 F347	22 SS321 / SS321 / SS321
45 ASTM A182 F51 (DUPLEX))	23 SS321 / SS321 / SS321 + HF
46 ASTM A182 F53 (SUPER DUPLEX 2507)	24 SS321 / SS321+HF / SS321 + HF
47 ASTM B564 N10665 (Hastelloy B2))	26 Full Bronze-Aluminum
48 ASTM B564 N06600 (Inconel 600)	27 Full Bronze-Aluminum UNS C95500
49 ASTM B564 N08800 (Inconel 800)	28 Full Cooper ASTM B62 C83600
50 ASTM B564 N05500 (MONEL 500)	30 ALLOY 625 / ALLOY 625 / ALLOY 625
51 ASTM A182 F44	31 HASTELLOY C276/ HASTELLOY C276 / HASTELLOY C276
52 ASTM B381 GR 2 (TITANIUM)	32 ALLOY 825 / ALLOY 825 / ALLOY 825
53 ASTM A182 F55 (Super Duplex F55)	33 ALLOY 625 / ALLOY 625 / HF
54 ASTM B564 N08825 (Incoloy 825)	HASTELLOY C276 34 HASTELLOY C276 / HF
55 ASTM B564 N06625 (Inconel 625)	ALLOY 825 / 35 ALLOY 825 / HF
56 ASTM B160 N02200 (Alloy 200)	36 ALLOY 625 / HF / HF
57 ASTM A182 Gr F92	37 HASTELLOY C276 / HF / HF
58 ASTM A182 F304H	38 ALLOY 825 / HF/HF
59 ASTM A182 F321H	39 ALLOY 2507 / ALLOY 2507 / ALLOY 2507
60 ASTM B564 N08810 (Inconel 800H)	40 SS347 / SS347/ SS347
	41 SS347 / SS347/ HF
	42 ALLOY 2507 / ALLOY 2507 / HF

ENDS	CLASS	SIZE	OPERATION
B14 ButtWeld SCH 140 ASME B16.25/ ASME B36.10	0 ANSI 150#	0.5 1/2"	HO Solid Handwheel Operator
B16 ButtWeld SCH 160 ASME B16.25/ ASME B36.10[11]	3 ANSI 300#	0.75 3/4"	BS Bare Shaft
XSF BW SCH XS-Flanged RF ASME B16.5	6 ANSI 600#	01 1"	EA Electric Actuator
STF BW SCH STD-Flanged RF ASME B16.5	8 API 800#	01.25 1 1/4"	PA Pneumatic Actuator
XXF BW SCH XXS-Flanged RF ASME B16.5	9 ANSI 900#	01.5 1 1/2"	HX Extended Stem & Solid Handwheel
10F BW SCH 10-Flanged RF ASME B16.5	1 ANSI 1500#	02 2"	BX Extended Stem & Bare Shaft
20F BW SCH 20-Flanged RF ASME B16.5	2 ANSI 2500#		EX Extended Stem & Electric Actuator
30F BW SCH 30-Flanged RF ASME B16.5	4 ANSI 4500#		PX Extended Stem & Pneumatic Actuator
40F BW SCH 40-Flanged RF ASME B16.5			HC Handwheel which has a Locking Device
60F BW SCH 60-Flanged RF ASME B16.5			HL Extended Stem & Handwheel which has a Locking Device
80F BW SCH 80-Flanged RF ASME B16.5			HB Extended Bonnet & Solid Handwheel
00F BW SCH 100-Flanged RF ASME B16.5			GB Extended Bonnet & GearBox Operator with Solid Handwheel
12F BW SCH 120-Flanged RF ASME B16.5			BB Extended Bonnet & Bare Shaft
14F BW SCH 140-Flanged RF ASME B16.5			
16F BW SCH 160-Flanged RF ASME B16.5			
XSJ BW SCH XS-Flanged RTJ ASME B16.5			
STJ BW SCH STD-Flanged RTJ ASME B16.5			
XXJ BW SCH XXS-Flanged RTJ ASME B16.5			
10J BW SCH 10-Flanged RTJ ASME B16.5			

BODY DESIGN (SERIES)

- 62 Globe Valve OS&Y API 602
- 62Y Y Pattern Globe Valve OS&Y API 602
- 62A Angle Pattern Globe Valve OS&Y API 602

BONNET DESIGN

- B Bolted Bonnet
- W Welded Bonnet
- P Pressure Seal

DISC DESIGN

- C Conical Std Plug
- N Needle Plug

SPECIAL FEATURES

MATERIAL

BODY

TRIM*
(Stem, Disc, Seats)

- 43 ALLOY 2507 / HF/ HF
- 44 SS304H / SS304H / SS304H
- 45 SS304H / SS304H / HF
- 46 SS304H / HF / HF
- 47 UNS N08810 / UNS N08810/ HF
- 48 SS321 / SS321H+HF / SS321H + HF
- 49 TRIM 49 (Stem in ASTM B564 N08810 (Incoloy 800), Seats in ASTM B564 N08810 (Incoloy 800)+STL, Wedge in ASTM B564 N08810 (Incoloy 800)+STL),
- 50 TRIM 50 (Stem in ASTM B564 N08810 (Incoloy 800), Seats in ASTM B564 N08810 (Incoloy 800), Wedge in ASTM B564 N08810 (Incoloy 800)),
- 51 ASTM B381 Gr.2/ASTM B381 Gr.2/ASTM B381 Gr.2
- 52 Trim Fully Bronze B150 C63200,
- 53 TRIM 53 (Stem in IN718, Wedge in ASTM A182 F316, Seat in STL)

ENDS

- 20J BW SCH 20-Flanged RTJ ASME B16.5
- 30J BW SCH 30-Flanged RTJ ASME B16.5
- 40J BW SCH 40-Flanged RTJ ASME B16.5
- 60J BW SCH 60-Flanged RTJ ASME B16.5
- 80J BW SCH 80-Flanged RTJ ASME B16.5
- 00J BW SCH 100-Flanged RTJ ASME B16.5
- 12J BW SCH 120-Flanged RTJ ASME B16.5
- 14J BW SCH 140-Flanged RTJ ASME B16.5
- 16J BW SCH 160-Flanged RTJ ASME B16.5
- F-S Flanged RF ASME B16.5-SW ASME B16.11
- F-T Flanged RF-Threaded
- F-W Flanged RF-weldeled
- F-P Flanged RF-Niple Ext 100 mm
- S-T SW - Threaded
- S-W SW - weldeled
- S-P SW-PUP
- T-W Threaded - weldeled
- T-P Threaded-Niple Ext
- PUP Both ends with nipple (Pups)
- XSS BW Schedule XS-Socketweld ASME B16.11
- STS BW Schedule STD-Socketweld ASME B16.11
- XXS BW Schedule XXS [11]-Socketweld ASME B16.11
- 10S BW Schedule 10-Socketweld ASME B16.11

CLASS

- 0 ANSI 150#
- 3 ANSI 300#
- 6 ANSI 600#
- 8 API 800#
- 9 ANSI 900#
- 1 ANSI 1500#
- 2 ANSI 2500#
- 4 ANSI 4500#

SIZE

- 0.5 1/2"
- 0.75 3/4"
- 01 1"
- 01.25 1 1/4"
- 01.5 1 1/2"
- 02 2"

OPERATION

- HO Solid Handwheel Operator
- BS Bare Shaft
- EA Electric Actuator
- PA Pneumatic Actuator
- HX Extended Stem & Solid Handwheel
- BX Extended Stem & Bare Shaft
- EX Extended Stem & Electric Actuator
- PX Extended Stem & Pneumatic Actuator
- HC Handwheel which has a Locking Device
- HL Extended Stem & Handwheel which has a Locking Device
- HB Extended Bonnet & Solid Handwheel
- GB Extended Bonnet & GearBox Operator with Solid Handwheel
- BB Extended Bonnet & Bare Shaft

BODY DESIGN (SERIES)	BONNET DESIGN	DISC DESIGN	SPECIAL FEATURES	MATERIAL BODY	MATERIAL TRIM* (Stem, Disc, Seats)
62 Globe Valve OS&Y API 602 68 Globe Valve OS&Y API 602 (Integral Flanges) 62Y Y Pattern Globe Valve OS&Y API 602 62A Angle Pattern Globe Valve OS&Y API 602	B Bolted Bonnet W Welded Bonnet P Pressure Seal	C Conical Std Plug N Needle Plug			

ENDS	CLASS	SIZE	OPERATION
20S BW Schedule 20-Socketweld ASME B16.11 30S BW Schedule 30-Socketweld ASME B16.11 40S BW Schedule 40-Socketweld ASME B16.11 60S BW Schedule 60-Socketweld ASME B16.11 80S BW Schedule 80-Socketweld ASME B16.11 00S BW Schedule 100-Socketweld ASME B16.11 12S BW Schedule 120-Socketweld ASME B16.11 14S BW Schedule 140-Socketweld ASME B16.11 16S BW Schedule 160[11]-Socketweld ASME B16.11) XST BW Schedule XS-Threaded NPT ASME B1.20.1 40T BW Schedule 40-Threaded NPT ASME B1.20.1 STT BW Schedule STD-Threaded NPT ASME B1.20.1 XXT W Schedule XXS[11]-Threaded NPT ASME B1.20.1 BCU ButtWeld Special SCH according to Customer specification[9] 4ST BW Schedule 40S-Threaded NPT ASME B1.20.1 8ST BW Schedule 80S-Threaded NPT ASME B1.20.1 1ST BW Schedule 10S-Threaded NPT ASME B1.20.1 B8S BW Schedule 80S B4S BW Schedule 40S B1S BW Schedule 10S B5S BW SCH 5S	0 ANSI 150# 3 ANSI 300# 6 ANSI 600# 8 API 800# 9 ANSI 900# 1 ANSI 1500# 2 ANSI 2500# 4 ANSI 4500#	0.5 1/2" 0.75 3/4" 01 1" 01.25 1 1/4" 01.5 1 1/2" 02 2"	HO Solid Handwheel Operator BS Bare Shaft EA Electric Actuator PA Pneumatic Actuator HX Extended Stem & Solid Handwheel BX Extended Stem & Bare Shaft EX Extended Stem & Electric Actuator PX Extended Stem & Pneumatic Actuator HC Handwheel which has a Locking Device HL Extended Stem & Handwheel which has a Locking Device HB Extended Bonnet & Solid Handwheel GB Extended Bonnet & GearBox Operator with Solid Handwheel BB Extended Bonnet & Bare Shaft

Example:

Globe Valve OS&Y API 602, Bolted Bonnet, Conical. Plug, Body A105,
Trim 5, Socket Weld Ends, API Class 800#, Size 2" with Solid Handwheel.

62BCNN2005SWD802HO

"NOTES:
* if there is not your feature in this chart, please contact us to give you the suitable figure
* TRIM = Stem/ Disc Seat / Seat.
* HF = Hard Faced, usually Stellite 6; other upon request.
* BM = Body Material.
* Please contact us for more avilable sizes.
* Flanged valves are flange welded (non integral body), available from 150# to 600# in Serie 62, For Integral Flange must be Serie 68 available from 150# to 300#.
* For Pups Ends, it is necessary to get the length and Schedule that you need in each end.
* The End to End of valves is according to TFV Standard (800# to 4500#).
* For Extended Stem, confirm us the length from center of pipeline to center of Operator (Gearbox or Handwheel)
* Locking Device includes a chain with padlock
*The seats are integral to body.
(6) Low Temperature Service.
(7) High Temperature Service.
(8) Stainless Steel.
(9) If Schedule is not according to ASME B16.25/ASME B36.10, please provide us your schedule
(10) Dual Certified Material
(11) BW XXS & 160 are welding to achieve the schedule"